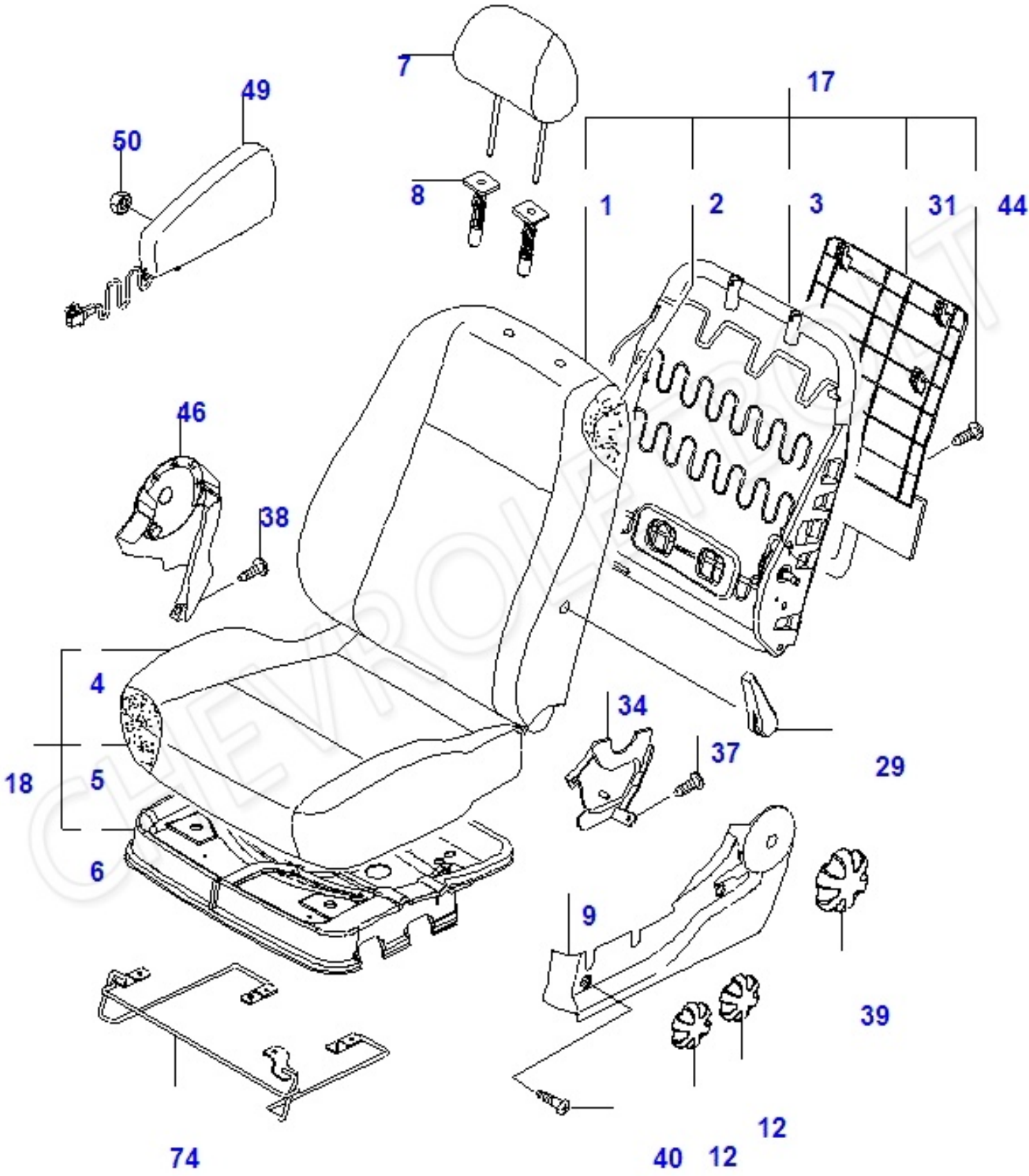
Opel-Daewoo-Chevrolet
Alkatrész szaküzlet

Cím: 1188 Budapest, Bethlen Gábor utca 3/b.
Tel: (06-1)294-2694, +36-20/332-5599
Fax: (06-1) 296-0207, Web: daewoo-bolt.hu
E-mail: opeldaewoo@gmail.com | opeldaewoo@freemail.hu



Kézikönyv: Lacetti, Nubira 3 / Karosszéria / Elsõ ülés alkatrészei



Opel-Daewoo-Chevrolet
Alkatrész szaküzlet

Cím: 1188 Budapest, Bethlen Gábor utca 3/b.
Tel: (06-1)294-2694, +36-20/332-5599
Fax: (06-1) 296-0207, Web: daewoo-bolt.hu
E-mail: opeldaewoo@gmail.com | opeldaewoo@freemail.hu



Kézikönyv: Lacetti, Nubira 3 / Karosszéria / Elsõ ülés alkatrészei

	KEY NO.																										
							MODEL									PART NAME											
																	EFFECTIVE POINT									
							BODY			LEVEL							VIN1		VIN2							
	I T C	PART NO.	C H G	MY F	MY T	D R V	4N	4H	5W	I	II	III	L / R	Q T Y	PNC	P / C O D E	FROM	TO	FROM	TO	OPTION	REMARKS
		1		COVERING-FRT S/BACK																		
□		96496452		04	04	L	B	B	B	X	X	.	LH	1							&82I&W6C&ASE-AJ8	
□		96472058		05	06	L	B	B	B	X	X	.	LH	1							&82I&W6C&ASE-AJ8	
□		96496458		04	04	L	B	B	B	X	X	.	LH	1							&82I&AJ8&W6C	
□		96472064		05	06	L	B	B	B	X	X	.	LH	1							&82I&AJ8&W6C	
□		96496485		04	06	L	B	B	B	.	X	X	LH	1							&82I&AJ8&W6R	
□		96496403		04	06	L	B	B	B	.	X	X	LH	1							&82I&W6R-AJ8	
□		96496478		04	05	L	B	B	B	.	.	X	LH	1							&82I&AJ8&W6E	
□		96472753	AD	06	06	L	B	B	B	.	.	X	LH	1							&82I&ASE&AJ8&W6E	
□		96495596		04	04	L	B	B	B	X	X	.	RH	1							&82I&W6C-AJ8	
□		96472056		05	06	L	B	B	B	X	X	.	RH	1							&82I&W6C-AJ8	
□		96496456		04	04	L	B	B	B	X	X	.	RH	1							&82I&AJ8&W6C	
□		96472062		05	06	L	B	B	B	X	X	.	RH	1							&82I&AJ8&W6C	
□		96496486		04	06	L	B	B	B	.	X	X	RH	1							&82I&AJ8&W6R	
□		96496484		04	06	L	B	B	B	.	X	X	RH	1							&82I&W6R-AJ8	
□		96496470		04	05	L	B	B	B	.	.	X	RH	1							&82I&AJ8&W6E	
□		96472745	AD	06	06	L	B	B	B	.	.	X	RH	1							&82I&AJ8&W6E	
		2		PAD-FRT S/BACK																		
□		96493484		04	06		B	B	B	X	X	X	LH	1							-AJF/AJ8	
□		96493485		04	06		B	B	B	X	X	X	LH	1							&AJF/AJ8	
□		96493494		04	06		B	B	B	X	X	X	RH	1							-AJF/AJ8	
□		96493486		04	06		B	B	B	X	X	X	RH	1							&AJ8	
		3		FRAME-FRT S/BACK																		
□		96479911		04	06		B	B	B	X	.	.	LH	1							&AQ6-AJ8/W6R/XM2/XM3	
□		96479914		04	06		B	B	B	X	.	.	LH	1							&AJ8&AQ6-W6R/XM2/XM3	
□		96479909		04	06		B	B	B	.	X	X	LH	1							&XM2/XM3-AJF/AJ8/W6R	
□		96479912		04	06		B	B	B	.	X	X	LH	1							&AJF/AJ8&XM2/XM3-W6R	
□		96493480		04	06		B	B	B	.	X	X	LH	1							&AJF/AJ8&W6R&XM2/XM3	
□		96493477		04	06		B	B	B	.	X	X	LH	1							&W6R&XM2/XM3-AJF/AJ8	
□		96479911		04	06		B	B	B	X	.	.	RH	1							&AQ6-AJ8/W6R/XM2/XM3	
□		96479915		04	06		B	B	B	X	.	.	RH	1							&AJ8&AQ6-W6R/XM2/XM3	
□		96479910		04	06		B	B	B	.	X	X	RH	1							&XM2/XM3-AJ8/W6R	
□		96479913		04	06		B	B	B	.	X	X	RH	1							&AJ8&XM2/XM3-W6R	
□		96493481		04	06		B	B	B	.	X	X	RH	1							&AJ8&W6R&XM2/XM3	
□		96493478		04	06		B	B	B	.	X	X	RH	1							&W6R&XM2/XM3-AJ8	
		4		COVERING-FRT SEAT CUSH																		
□		96495556		04	04	L	.	B	.	X	.	.	LH	1							&82I&W6C-AGD	
□		96471982		05	06	L	.	B	.	X	.	.	LH	1							&82I&W6C-AGD	
□		96495560		04	04	L	B	B	B	X	X	.	LH	1							&82I&AGD&W6C	
□		96471990		05	06	L	B	B	B	X	X	.	LH	1							&82I&AGD&W6C	
□		96495580		04	05	L	B	B	B	.	X	X	LH	1							&82I&AGD&W6R	
□		96473367	AD	06	06	L	B	B	B	.	X	X	LH	1							&82I&AGD&W6R	
□		96495564	CH	04	05	L	B	B	B	.	.	X	LH	1							&82I&AGD&W6E	
□		96472598	AD	06	06	L	B	B	B	.	.	X	LH	1							&82I&AGD&W6E	
□		96495558		04	04	L	B	B	.	X	X	.	RH	1							&82I&W6C-AGD	
□		96471988	CH	05	06	L	B	B	.	X	X	.	RH	1							&82I&W6C	
□		96495582		04	05	L	B	B	B	.	X	X	RH	1							&82I&W6R	
□		96473369	AD	04	06	L	B	B	B	.	X	X	RH	1							&82I&W6R	
□		96495566	CH	04	05	L	B	B	B	.	.	X	RH	1							&82I&W6E	
□		96472600	AD	06	06	L	B	B	B	.	.	X	RH	1							&82I&W6E	
		5		PAD-FRT SEAT CUSH																		
□		96479916		04	06		B	B	B	X	X	X	LH	1								
□		96479917		04	06		B	B	B	X	X	X	RH	1							-ABH	
		6		FRAME-FRT SEAT CUSH																		
□		96479903		04	06	L	.	B	.	X	.	.	LH	1							-AGD	
□		96479901		04	06	L	B	B	B	X	X	X	LH	1							&AGD	
□		96479904		04	06	L	B	B	.	X	X	X	RH	1							-AGD	
		7		HEADREST A-FRT SEAT																		
□		96495554		04	04		B	B	B	X	X	.		2							&82I&W6C-AYT	
□		96472078		05	06		B	B	B	X	X	.		2							&82I&W6C-AYT	
□		96495598		04	06		B	B	B	.	X	X		2							&82I&AYT&W6R	
□		96496602	CH	04	05		B	B	B	.	.	X		2							&82I&AYT&W6E	
□		96472787	AD	06	06		B	B	B	.	.	X		2							&82I&AYT&W6E	
		8		SLEEVE-HEADREST																		
□		96486562		04	06		B	B	B	X	X	X		2							&82I	
□		96616511		04	06		B	B	B	X	X	X		2							&82I	
		9		COVER-OTR,FRT SEAT																		
□		96616540		04	06		B	B	B	X	.	.	LH	1							&82I&AQ6-AGD	
□		96616541		04	06		B	B	B	X	X	X	LH	1							&82I&AGD&AQ6	
□		96616542		04	06		B	B	B	X	.	.	RH	1							&82I&AQ6-AGD	
□		96616543		04	06		B	B	B	X	X	X	RH	1							&82I&AGD&AQ6	
		12		REGULATOR-FRT SEAT																		
□		96486561		04	06		B	B	B	X	X	X		2							&82I&AGD	
		17		SEAT A-FRT BACK																		
□		96495872		04	04	L	B	B	B	X	X	.	LH	1							&82I&W6C-AJ8/XM2	
□		96472020		05	06	L	B	B	B	X	X	.	LH	1							&82I&W6C-AJ8/XM2	
□		96495880		04	04	L	B	B	.	X	X	.	LH	1			023478				&82I&AJ8&W6C-XM2	
□	N	96471707		04	04	L	B	B	B	.	X	X	LH	1			023479				&82I&AJ8&W6C-XM2	
□		96472030		05	06	L	B	B	B	.	X	X	LH	1							&82I&AJ8&W6C-XM2	
□		96495874		04	04	L	B	.	B	.	X	.	LH	1							&82I&W6C&XM2-AJ8	
□		96472022		05	06	L	B	.	B	.	X	.	LH	1							&82I&W6C&XM2-AJ8	
□		96495882		04	04	L	B	.	.	.	X	.	LH	1			023478				&82I&AJ8&W6C&XM2	
□	N	96471709		04	04	L	B	B	B	.	X	.	LH	1			023479				&82I&AJ8&W6C&XM2	
□		96472032		05	06	L	B	B	B	.	X	.	LH	1							&82I&AJ8&W6C&XM2	
□		96496420		04	04	L	B	B	.	.	.	X	LH	1			023478				&82I&AJ8&W6E	
□	N	96471733		04	05	L	B	B	B	.	.	X	LH	1			023479	039630			&82I&AJ8&W6E	
□	N	96472114	CH	04	05	L	B	B	B	.	.	X	LH	1			039631				&82I&AJ8&W6E	
□		96472713	AD	06	06	L	B	B	B	.	.	X	LH	1							&82I&AJ8&W6E	
□		96495844		04	06	L	B	B	B	.	X	.	LH	1							&82I&W6R-AJ8	
□		96495848		04	04	L	B	B	.	.	X	.	LH	1			023478				&82I&AJ8&W6R	
□	N	96471580		04	05	L	B	B	B	.	X	X	LH	1			023479	039630			&82I&AJ8&W6R	
□	N	96472122		05	06	L	B	B	B	.	X	X	LH	1			039631				&82I&AJ8&W6R	
□		96495870		04	04	L	B	B	B	X	X	.	RH	1							&82I&W6C-AJ8/XM3	
□		96472016		05	06	L	B	B	B	X	X	.	RH	1							&82I&W6C-AJ8/XM3	
□		96470817		04	04	L	B	B	B	.	X	.	RH	1							&82I&W6C&XM3-AJ8	
□		96472018		05	06	L	B	B	B	.	X	.	RH	1							&82I&W6C&XM3-AJ8	
□		96495878		04	04	L	B	B	.	X	X	.	RH	1			023478				&82I&AJ8&W6C-XM3	
□	N	96471703		04	04	L	B	B	B	X	X	.	RH	1			023479				&82I&AJ8&W6C-XM3	
□		96472026		05	06	L	B	B	B	X	X	.	RH	1							&82I&AJ8&W6C-XM3	
□		96471705		04	04	L	B	B	B	.	X	.	RH	1							&82I&AJ8&W6C&XM3	
□		96472028		05	06	L	B	B	B	.	X	.	RH	1							&82I&AJ8&W6C&XM3	
□		96496408		04	04	L	B	B	.	.	.	X	RH	1			023478				&82I&AJ8&W6E-XM3	
□	N	96471723		04	05	L	B	B	B	.	.	X	RH	1			023479	039630			&82I&AJ8&W6E-XM3	
□	N	96472108	CH	04	05	L	B	B	B	.	.	X	RH	1			039631				&82I&AJ8&W6E-XM3	
□		96472695	AD	06	06	L	B	B	B	.	.	X	RH	1							&82I&AJ8&W6E-XM3	
□		96471725		04	05	L	B	B	B	.	.	X	RH	1				039630			&82I&AJ8&W6E&XM3	
□	N	96472138	CH	04	05	L	B	B	B	.	.	X	RH	1			039631				&82I&AJ8&W6E&XM3	
□		96472697	AD	06	06	L	B	B	B	.	.	X	RH	1							&82I&AJ8&W6E&XM3	
□		96495850		04	04	L	B	B	.	.	X	X	RH	1			023478				&82I&AJ8&W6R	
□	N	96471582		04	04	L	B	B	B	.	X	X	RH	1			023479	039630			&82I&AJ8&W6R	
□	N	96472124		04	06	L	B	B	B	.	X	X	RH	1			023479				&82I&AJ8&W6R	
□		96495846		04	06	L	B	B	B	.	X	.	RH	1							&82I&W6R-AJ8	
		18		SEAT A-FRT CUSH																		
□		96495512		04	04	L	.	B	.	X	.	.	LH	1							&82I&W6C-AGD	
□		96471966		05	06	L	.	B	.	X	.	.	LH	1							&82I&W6C-AGD	
□		96495516		04	04	L	B	B	B	X	X	.	LH	1							&82I&AGD&W6C	
□		96471974		05	06	L	B	B	B	X	X	.	LH	1							&82I&AGD&W6C	
□		96495538		04	05	L	B	B	B	.	X	X	LH	1							&82I&AGD&W6R	
□		96473355	AD	06	06	L	B	B	B	.	X	X	LH	1							&82I&AGD&W6R	
□		96495522	CH	04	05	L	B	B	B	.	.	X	LH	1							&82I&AGD&W6E	
□		96472554	AD	06	06	L	B	B	B	.	.	X	LH	1							&82I&AGD&W6E	
□		96495514		04	04	L	B	B	B	X	X	.	RH	1							&82I&W6C-AN3	
□		96471972		05	06	L	B	B	B	X	X	.	RH	1							&82I&W6C-AN3	
□		96496592		04	04	L	B	B	B	.	X	.	RH	1							&82I&AN3&W6C	
□		96471978		05	06	L	B	B	B	.	X	.	RH	1							&82I&AN3&W6C	
□		96495540		04	05	L	B	B	B	.	X	X	RH	1							&82I&AN3&W6R	
□		96473357	AD	06	06	L	B	B	B	.	X	X	RH	1							&82I&AN3&W6R	
□		96495528	CH	04	05	L	B	B	B	.	.	X	RH	1							&82I&AN3&W6E	
□		96472558	AD	06	06	L	B	B	B	.	.	X	RH	1							&82I&AN3&W6E	
		29		GRIP-LUMBAR SUPT SEAT																		
□		96616513		04	06		B	B	B	.	X	X		1							&82I&XM2	
□		96616513		04	06		B	B	B	.	X	X		1							&82I&XM2	
		31		COVER A-FRT S/BACK																		
□		96493527		04	06		B	B	B	.	X	X		2							&82I&W6R	
		34		COVER-FRT SEAT,INR																		
□		96616530		04	06		B	B	B	X	X	X	LH	1							&82I	
□		96616531		04	06		B	B	B	X	X	X	RH	1							&82I	
		37		SCREW																		
□		94520177		04	06		B	B	B	X	X	X		4								
		38		SCREW																		
□		94520177		04	06		B	B	B	X	X	X		4								
		39		REGULATOR-RECL,FRT SEAT																		
□		96452906		04	06		B	B	B	X	X	X		2							&82I	
		40		SCREW																		
□		94520177		04	06		B	B	B	X	X	X		6								
		44		SCREW																		
□		94520241		04	06		B	B	B	X	X	X		4							&W6R	
		46		COVER A-FRT SEAT,INR																		
□		96616544		04	06		B	B	B	X	X	X	LH	1							&82I	
□		96616545		04	06		B	B	B	X	X	X	RH	1							&82I	
		49		MODULE A-AIR BAG,SIDE																		
□		96557004	CH	04	04		B	B	.	X	X	X	LH	1		DT		023489			&AJ8	
□	N	96427366	AD	04	04		B	B	.	X	X	X	LH	1		AF	023490				&AJ8	
□		96470791		05	06		B	B	B	X	X	X	LH	1		NB					&AJ8	
□		96557005	CH	04	04		B	B	.	X	X	X	RH	1		PT		023489			&AJ8	
□	N	96427367	AD	04	04		B	B	.	X	X	X	RH	1		AG	023490				&AJ8	
□		96470792		05	06		B	B	B	X	X	X	RH	1		NC					&AJ8	
		50		NUT																		
□		94515339		04	06		B	B	B	X	X	X		4							&AJ8	
		74		WIRE A-UNDERTRAY																		
□		96495962	AD	04	06	L	B	B	B	X	X	X	RH	1							&AN3	